RUDDER INDICATOR KIT: 1140465

COMMON

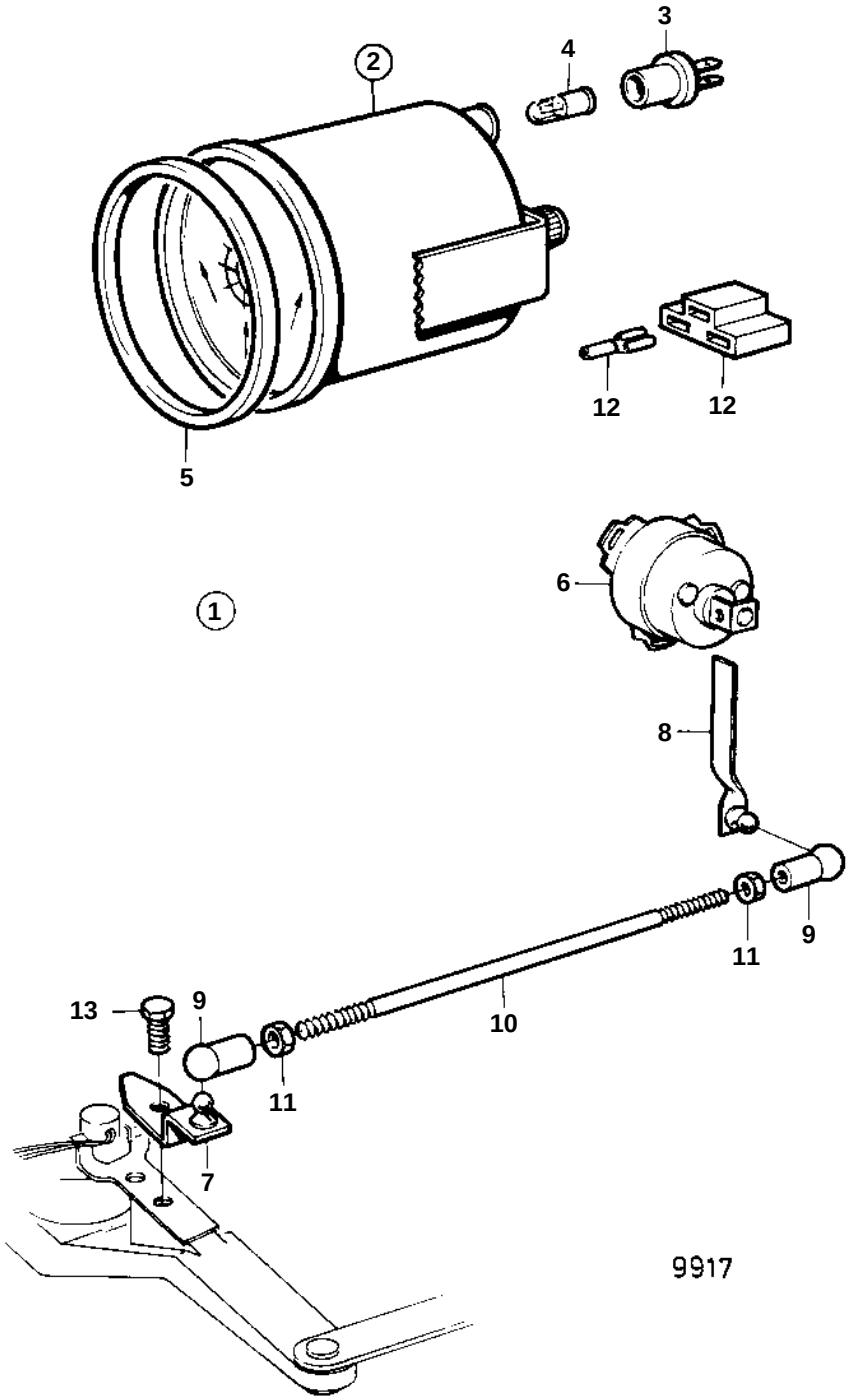

COMMON

REF	PART NO.	QTY	DESCRIPTION		NOTES
1	1140465	1	Rudder indicator kit		FOR ENGINE WITH REVERSE GEAR.
2	863944	1	· Rudder indicator		
3	863945	1	· · Bulb socket		FOR RUDDER INDICATOR INSTRUMENTS WITH PART NO 828698 SHOULD WHITE BULB 19923 AND BULB HOLDER 808175 BE INSTALLED
4	863946	1	· · Bulb		RED. FOR RUDDER INDICATOR INSTRUMENTS WITH PART NO 828698 SHOULD WHITE BULB 19923 AND BULB HOLDER 808175 BE INSTALLED
5	858643	1	· Front ring		
6	837772	1	· Rudder position sens		
12		X	· CABLES AND TERMINALS		SEE GROUP 3